ASSEMBLY INSTRUCTIONS
10.AC.1085

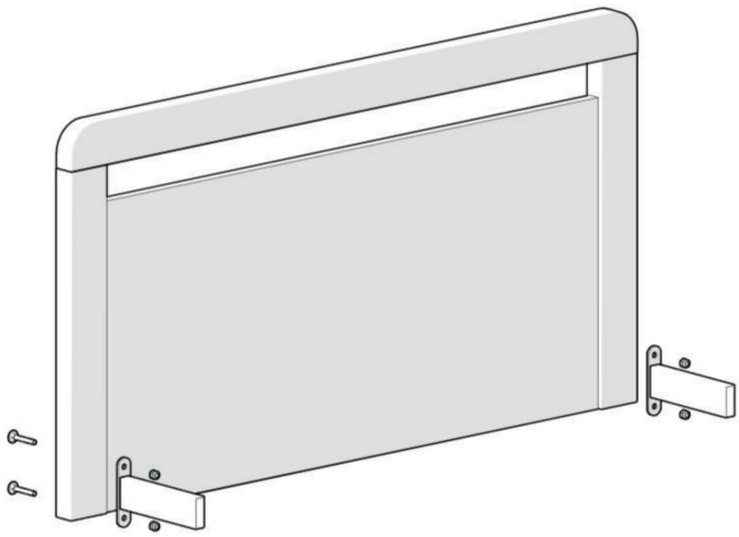

MATERIAL REQUIRED FOR ASSEMBLY



10 MM SPANNER - 1 X

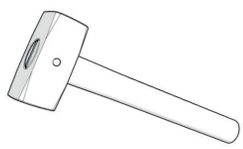

1 X

SUPPLIED MATERIALS



8 X

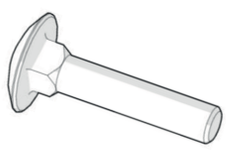

8 X

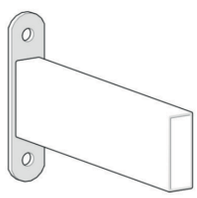

4 X

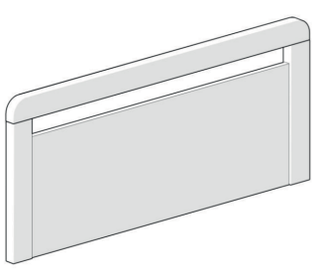

1 X

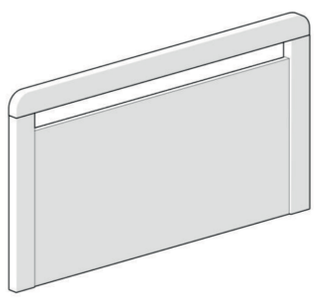

1 X

STEP 1

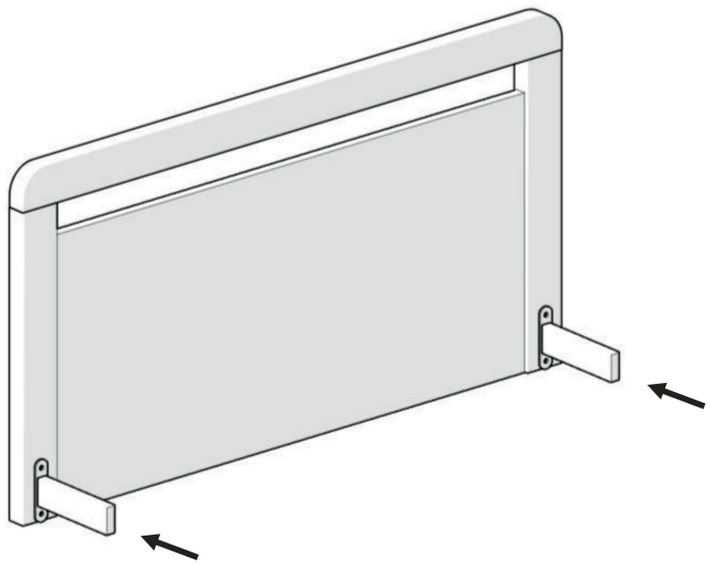

STEP 2

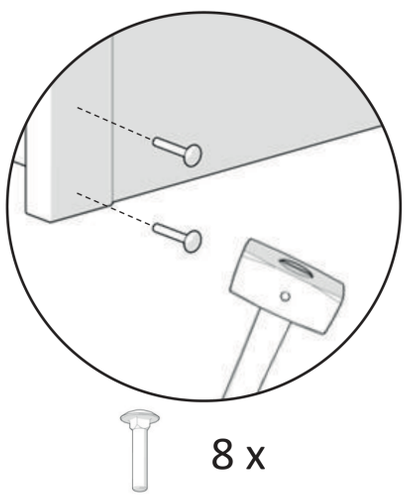

8 x

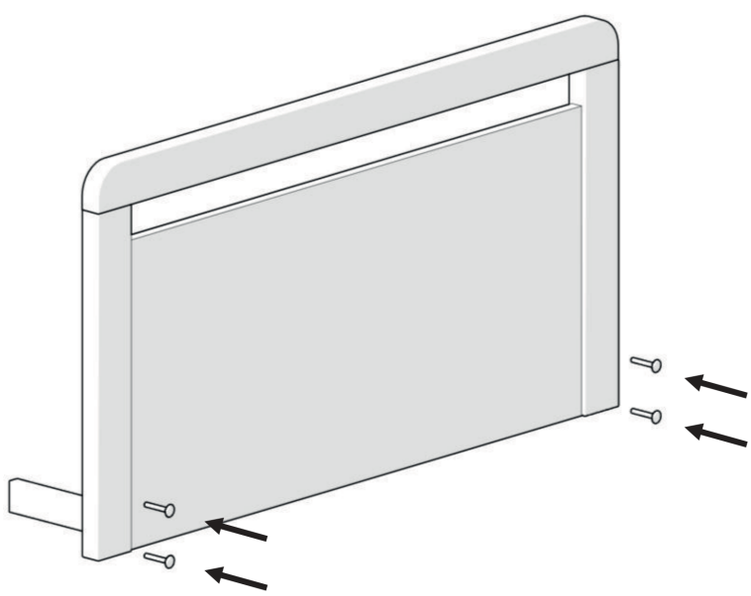

STEP 3

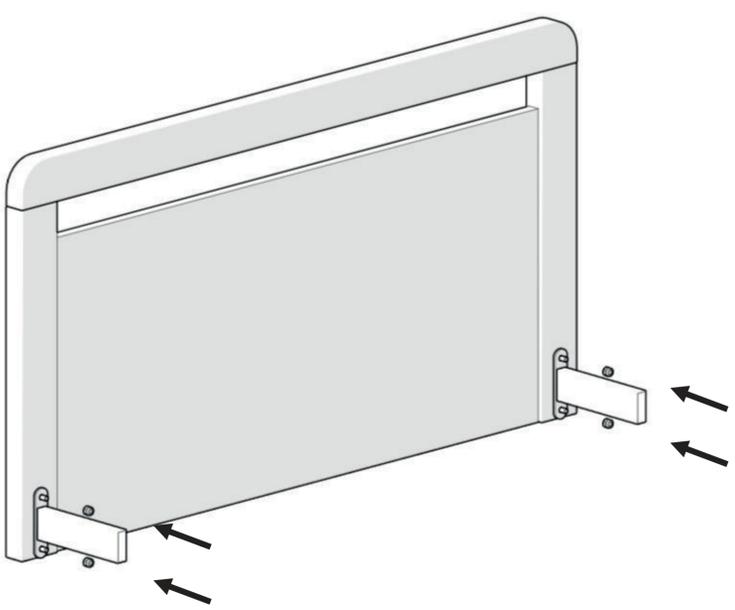



8 x

